Programming the STC8G1K17 microcontroller with STC USB Programmer

Firmware of the dash clock can be updated using the ISP programmer.

1. The loader tool is STC USB Programmer.



Wiring diagram

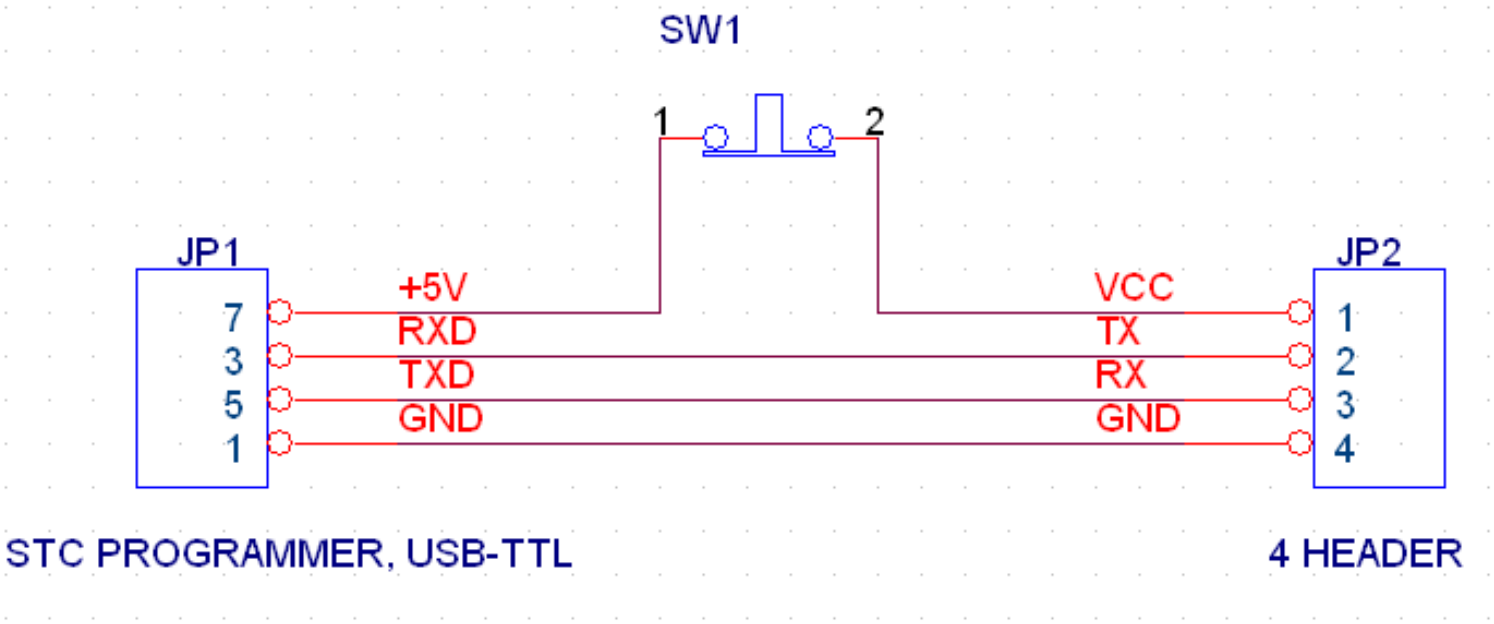

Optional SW1 is a push-button switch, normally close, open the circuit when pressed.

This switch, when pressed and released, will recycle the power of the target chip, to enable ISP programming mode.

2. The program is ISP-STC v6.88.

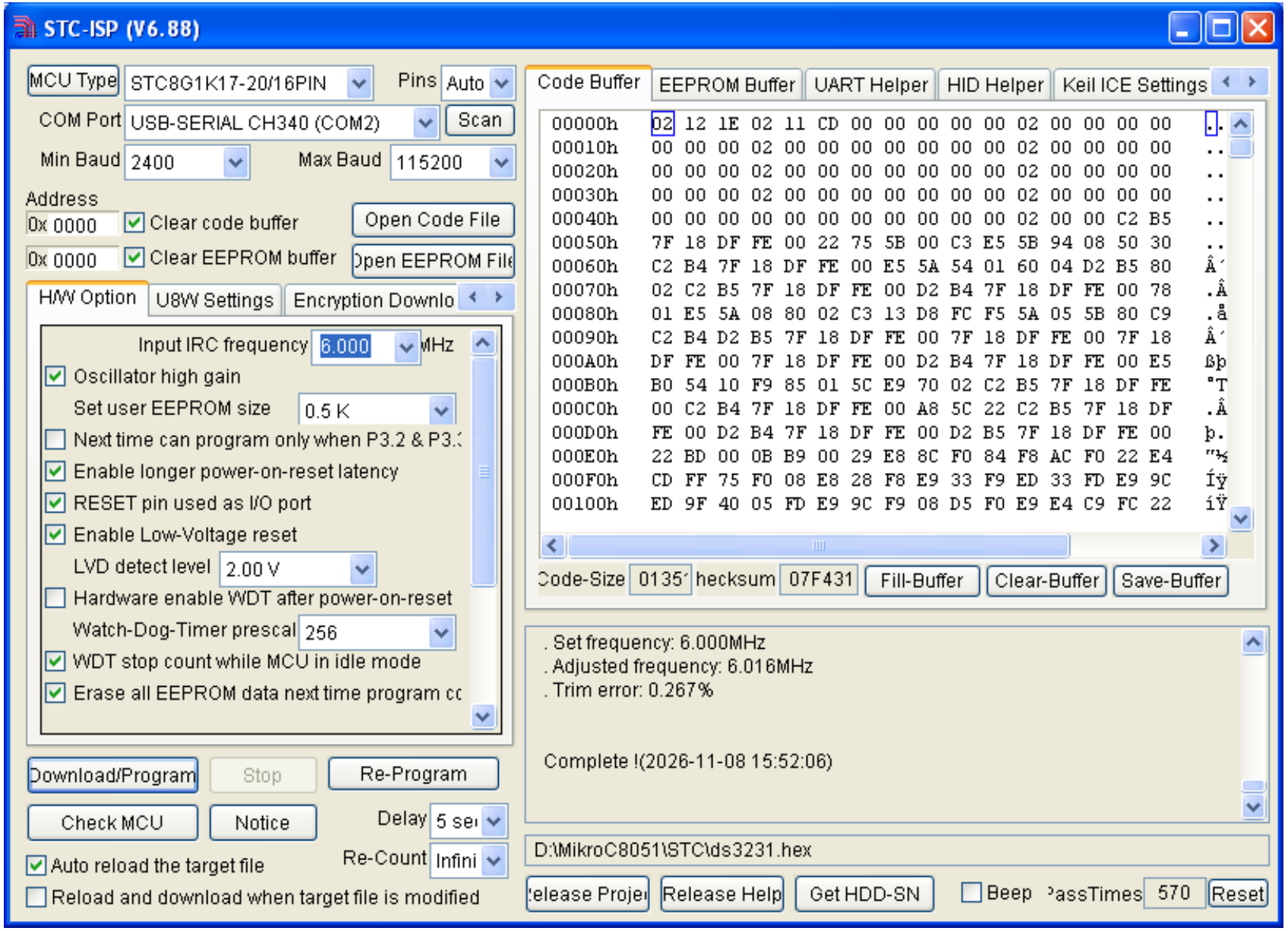

3. Select the MCU Type, STC8G1K17

4. Set the internal clock, IRC frequency, to 6.00 MHz

5. Open Code File

6. Open the EEPROM File, change the byte for user selections, time format, number of modes, and welcome text.

Location	Data	Selection
0x0000	0x12	Time 12 format, 0x12 Time 24 format, 0x24
0x0001	0x03	Mode 0 to 3
0x0002	0x01	Welcome text 0x00 none 0x01 HELLO 0x02 HOLA

7. Click Download/Program, then press/release SW1. The code file will be loaded to the MCU.

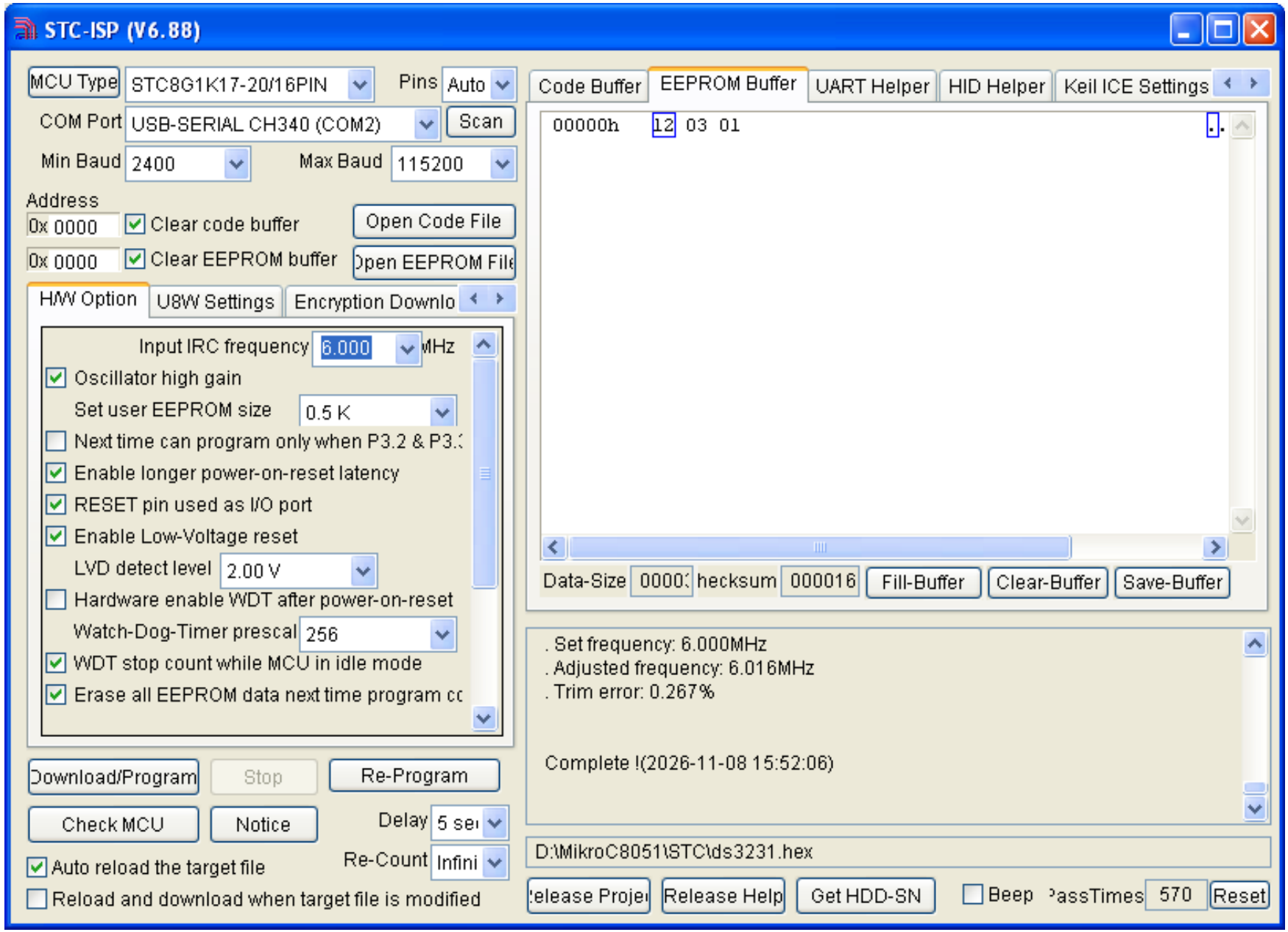
STC-ISP (V6.88)
MCU Type
STC8G1K17-20/16PIN
Pins
Auto
COM Port
USB-SERIAL CH340 (COM2)
Scan
Min Baud
2400
Max Baud
115200
Address
0x 0000
Clear code buffer
Open Code File
0x 0000
Clear EEPROM buffer
Open EEPROM File
H/W Option
U8W Settings
Encryption Downlo
Input IRC frequency
6.000
MHz
Oscillator high gain
Set user EEPROM size
0.5 K
Next time can program only when P3.2 & P3.
Enable longer power-on-reset latency
RESET pin used as I/O port
Enable Low-Voltage reset
LVD detect level
2.00 V
Hardware enable WDT after power-on-reset
Watch-Dog-Timer prescal
256
WDT stop count while MCU in idle mode
Erase all EEPROM data next time program cc
Download/Program
Stop
Re-Program
Check MCU
Notice
Delay
5 se
Auto reload the target file
Re-Count
Infini
Reload and download when target file is modified
Code Buffer
EEPROM Buffer
UART Helper
HID Helper
Keil ICE Settings
00000h
12 03 01
Data-Size
0000
hecksum
000016
Fill-Buffer
Clear-Buffer
Save-Buffer
. Set frequency: 6.000MHz
. Adjusted frequency: 6.016MHz
. Trim error: 0.267%
Complete !(2026-11-08 15:52:06)
D:\MikroC8051\STC\ds3231.hex
elease Proje
Release Help
Get HDD-SN
Beep
assTimes
570
Reset