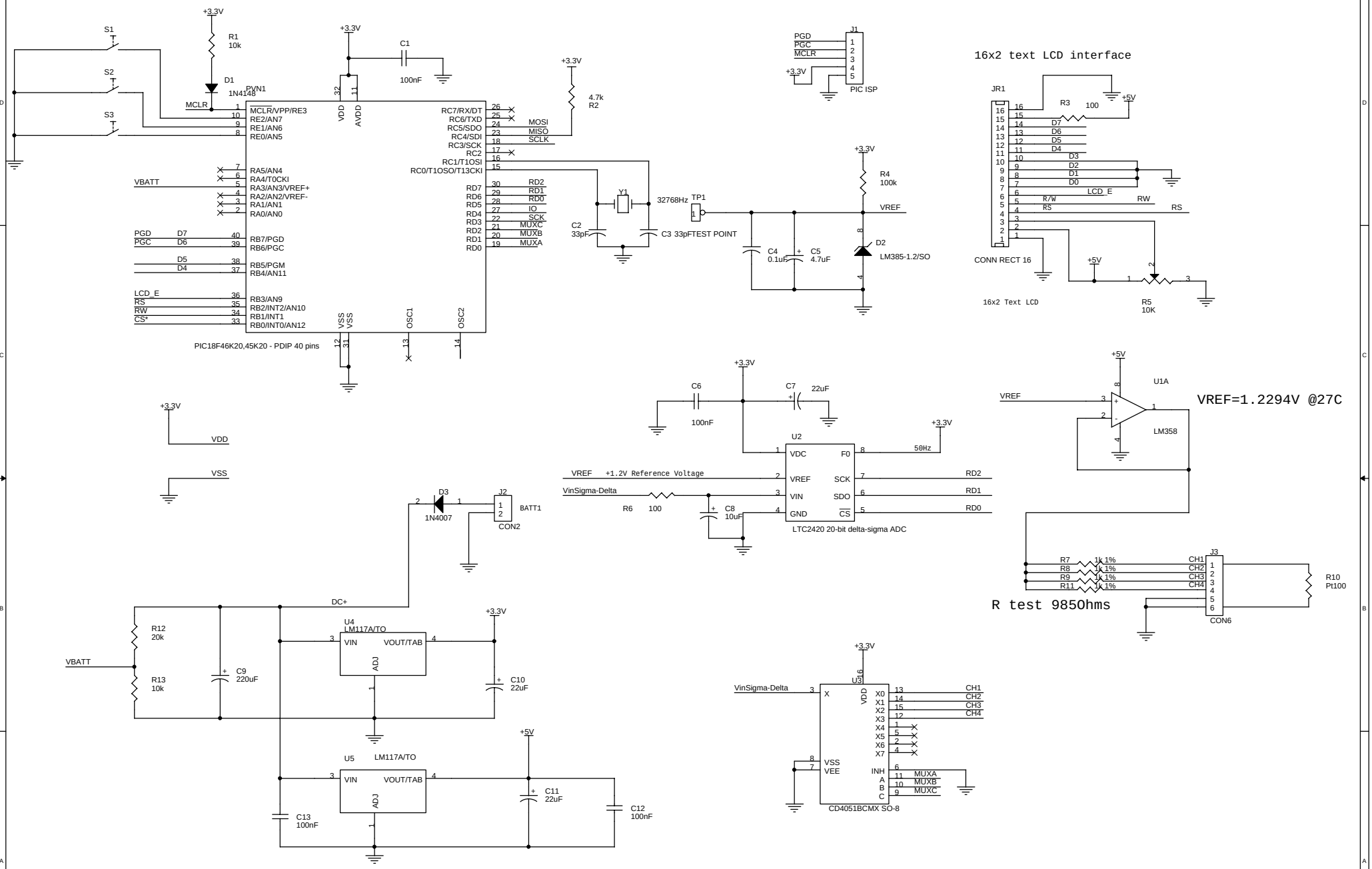

Copyright (C) 2011 by Wichit Sirichote, wichit.sirichote@gmail.com

Title	4-CHANNEL Pt100 THERMOMETER
Size	Custom<Doc>
Document Number	
Rev	1
Date:	Saturday, August 06, 2011
Sheet	1 of 1